Fiilex Q5 COLOR

Cinematic LED Fresnel Light



The **Q5 Color** is a 175W 5" LED Fresnel that generates high-quality full-color light output. This fixture uses the latest iteration of Fiilex's Dense Matrix LED technology to deliver color quality and optical versatility that are superior to previous generations of LED fresnels. With its wide spot/flood range, smooth dimming to 0%, no flicker, and high CRI, the Q5 Color combines the extensive feature set of top-tier RGBW LEDs with the performance of a tungsten fresnel.

FEATURES

- High-CRI white light output (2000-10000K)
- 8 and 16-bit color modes: CCTRGBW, CCTHSI, CIExy, etc.
- 12°-55° spot/flood range with no optical aberrations
- V-mount power supply swaps easily with 26V batteries
- Removable fresnel for wider throw / softbox compatibility
- Extremely lightweight (≈7 lbs)
- Smooth and Sharp dimming modes
- DMX-controllable fan modes: Full, Variable, Silent, Off
- IP-X5 Rating (water resistant)
- 8-leaf barndoor cuts clean with no color splitting

BEAM PROFILE

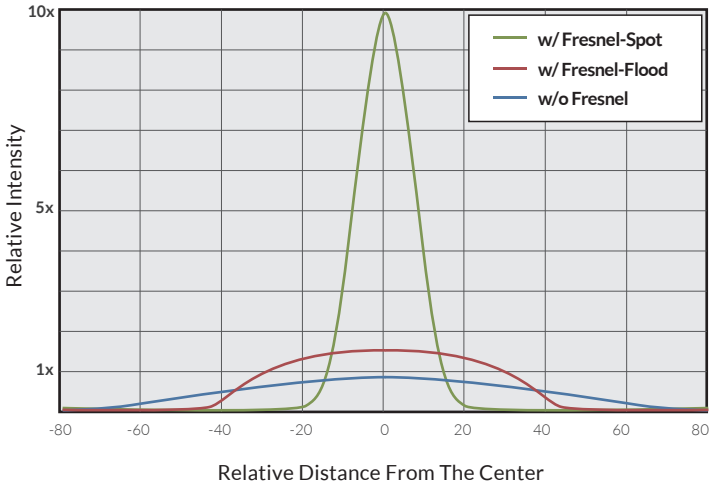

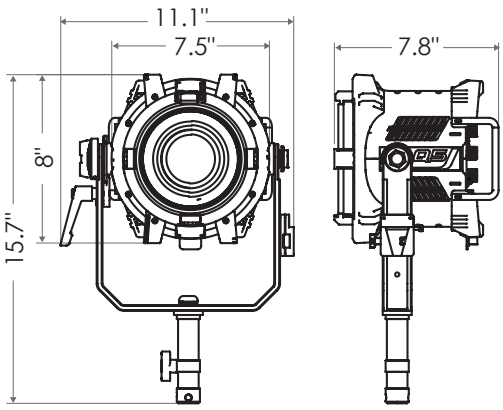

04062023A

1689 Regatta Blvd. Richmond, CA 94804 | (510) 620-5155 | fiilex@fiilex.com **www.fiilex.com**

Fiilex Q5 COLOR

Cinematic LED Fresnel Light

SPECIFICATIONS

Fresnel Diameter	5”
Beam Angle	12°-55° with fresnel (80° without fresnel)
CCT Range	2000-10000K continuous tuning + magenta/green shift
CRI / TLCI	95 / 90 typical
Control Modes	CCT, HSI, RGBW, Gels, CCTRGBW, CCTHSI, CIExy, ICTHS, and more
Dimming	100 - 0% flicker free
Dimming Modes	Smooth, Sharp
Light Engine	DiCon Dense Matrix LED
Power Consumption	175W max AC | 160W max DC
BTUs/hour	631 (BTUs/hour) max
DC Input	24-48V DC (via XLR-3)
AC Input	100 - 240V AC, 50~60Hz (via powerCON TRUE1)
DMX/RDM Port	XLR-5
USB Power Output	5V/1A (via USB-A)
Weight	Fixture: 7.3lbs / 3.3kg | Power adapter: 2.6lbs / 1.2kg
Size (L x W x H)	7.8" x 11.1" x 15.7" / 19.7cm x 28.3cm x 39.7cm
Mount Type	Combo (baby stud female / junior stud male)
IP Rating	IP-X5 (water-resistant)
Thermal Design	Aluminum extrusion cooling system w/ fan
Operating Temperature	32 - 104°F / 0 - 40°C

PHOTOMETRIC DATA

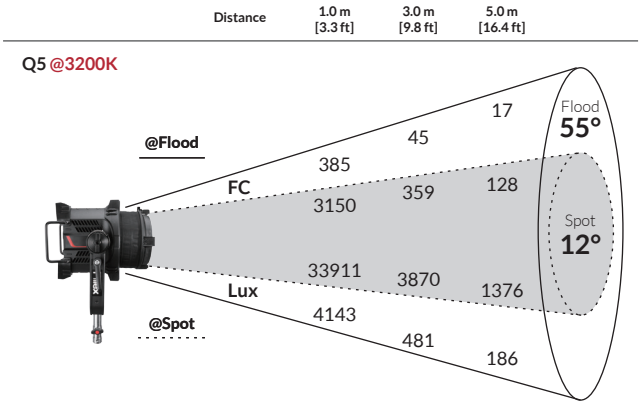

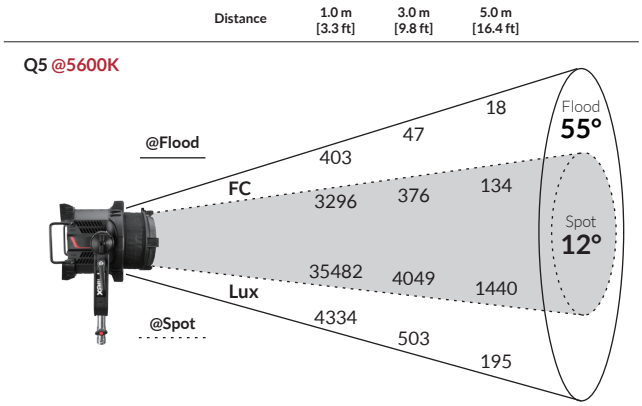

OPTIONAL ACCESSORIES



5" Speed Ring



D-Tap Cable, 18” Curled



DC Jumper Cable, 6 ft



OCTA3 Softbox

1689 Regatta Blvd. Richmond, CA 94804 | (510) 620-5155 | fiilex@fiilex.com **www.fiilex.com**